Technische Daten/ Technical Data

KLUDI OBJEKTA
kitchen faucet multi
DN 15

Ref.: 325760575

Finishes:
05 chrome

Product description
Manufacturer KLUDI GmbH & Co. KG
Typ: KLUDI OBJEKTA
kitchen faucet multi
Ref.: 325760575

kitchen faucet multi
connection for washing machine or dishwasher
kitchen faucet
single lever mixer
1-hole mounted
solid lever, metal
aerator M24
ceramic cartridge with hot water safety device
flow rate at 3 bar 12 l/min.
swivel spout (360°)
flexible hoses G3/8 DVGW approved
rapid installation set

Produktabbildung/ Product picture



Maßzeichnung/ Dimensional drawing

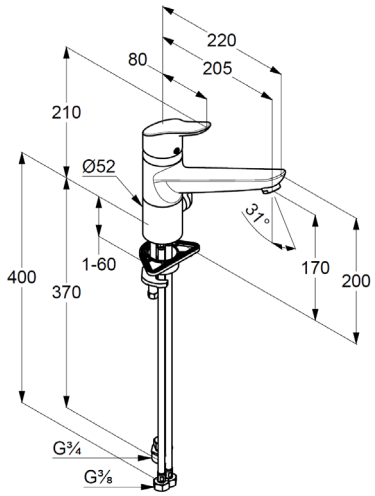

Durchfluss/ Flow rate

