Technische Daten/ Technical Data

KLUDI BALANCE
single lever bidet mixer
DN 15

Ref.: 522168775

Finishes:
87 matt black/chrome

Product description
Manufacturer KLUDI GmbH & Co. KG
Typ: KLUDI BALANCE
single lever bidet mixer
Ref.: 522168775

bidet mixer
single lever mixer
1-hole mounted
solid lever, metal
aerator, S-Pointer M24
ceramic cartridge with hot water safety device
flow rate at 3 bar 7,6 l/min.
flexible hoses G3/8 DVGW approved
rapid installation set
pop up waste G1 1/4 metal

Produktabbildung/ Product picture

Maßzeichnung/ Dimensional drawing

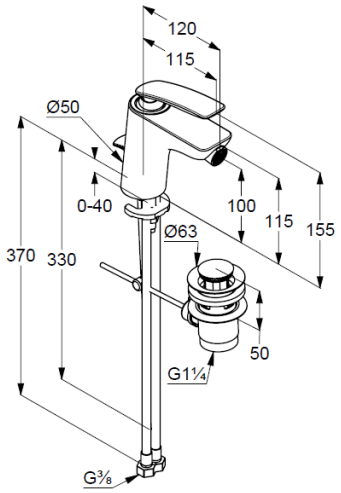
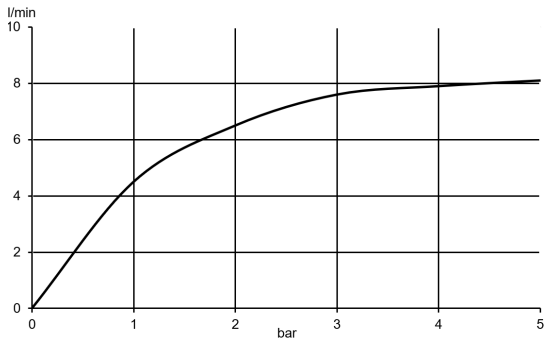
Durchfluss/ Flow rate