Technische Daten/ Technical Data

KLUDI BOZZ
single lever bath-and shower mixer
DN 15

Ref.: 38691N076

Finishes:
N0 Brushed Gold (18) PVD

Product description
Manufacturer KLUDI GmbH & Co. KG
Typ: KLUDI BOZZ
single lever bath-and shower mixer
Ref.: 38691N076

bath-and shower mixer
single lever mixer
wall mounted
automatic diverter: shower/bath
solid lever, metal
aerator M24
protected against back flow
shower outlet G½
ceramic cartridge with hot water safety device
flow rate bath at 3 bar 20 l/min.
flow rate shower at 3 bar 18 l/min.
S-unions G½ x G¾

Produktabbildung/ Product picture

Maßzeichnung/ Dimensional drawing

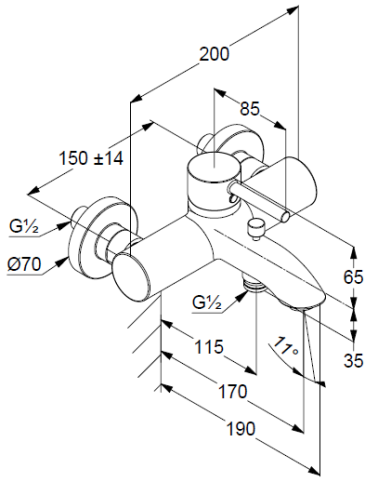

Durchfluss/ Flow rate

KLUDI