Spare Parts / Ersatzteile / Pièces de recharge / Pezzi di Ricambio / Piezas de requesto / Parte de reposição / Reserveonderdelen / Reservdelar / Reservedeler / Varaosat / Vraosat / Varahlutir / Ανταλλακτικά / Yedek Parçalar / Náhradní díly / Náhradné diely / Nadomestni deli / Резервни части / Запчасти / Części Zapasowe / Piese de schimb / Rendelhető alkatrészek / Запасні частини / Reservni delovi / Резервни делови / Резервни делови / Atsarginių dalių / Tellitavad varuosad / Rezervju daļu

**XX = AA, GN, ...**

| Pos. | Part No. |
|---|---|
| 1 | A 861 568 XX |
| 2 | A 861 371 NU |
| 3 | A 861 375 NU |
| 4 | A 861 376 NU |
| 5 | A 861 498 NU |
| 6 | A 861 372 NU |
| 7 | B 960 714 XX |
| | B 961 016 XG |
| 8 | A 861 385 NU |
| 9 | BE 175 XX |
| 10 | A 7896 XX |
| 11 | A 861 388 XX |
| 12 | B 961 024 XX |
| 13 | A 861 389 XX |
| 14 | A 861 569 XX |
| 15 | A 7889 XX |
| 16 | A 861 379 XX (150 mm) |
| | A 861 380 XX (300 mm) |
| 17 | A 861 383 AA |
| 18 | A 861 733 XX |
| 19 | A 861 815 XG |
| | A 861 815 XX |

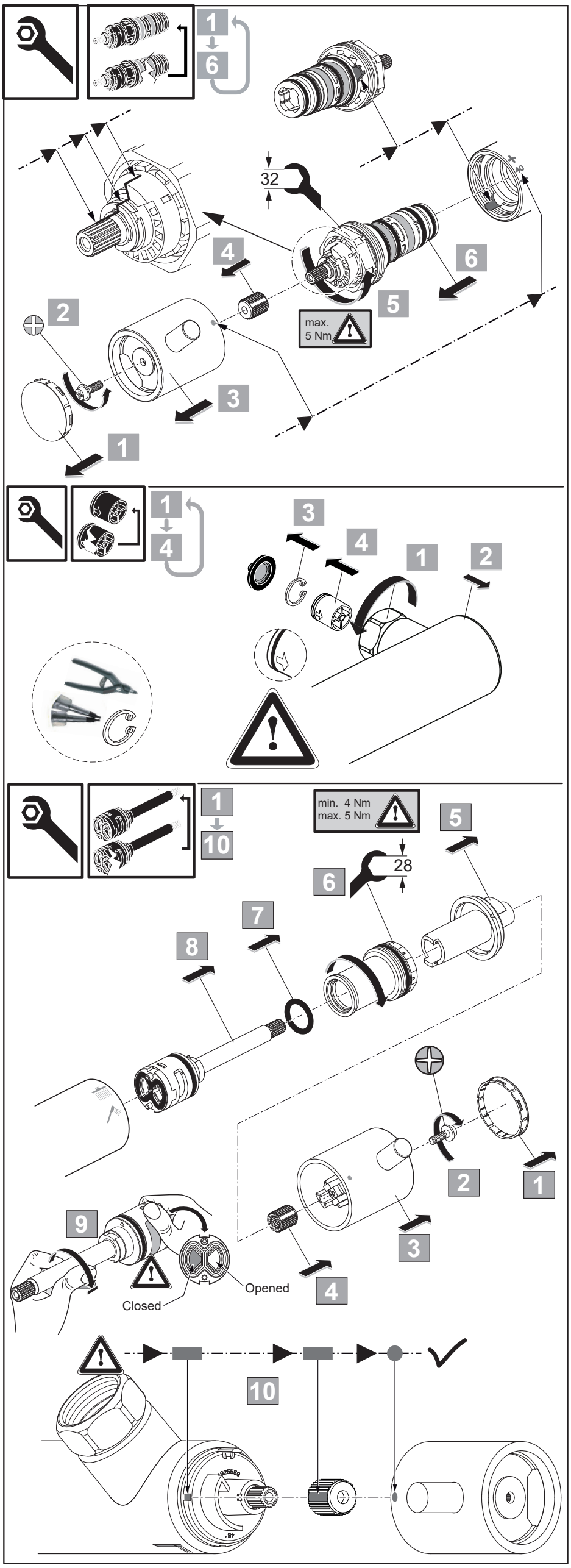


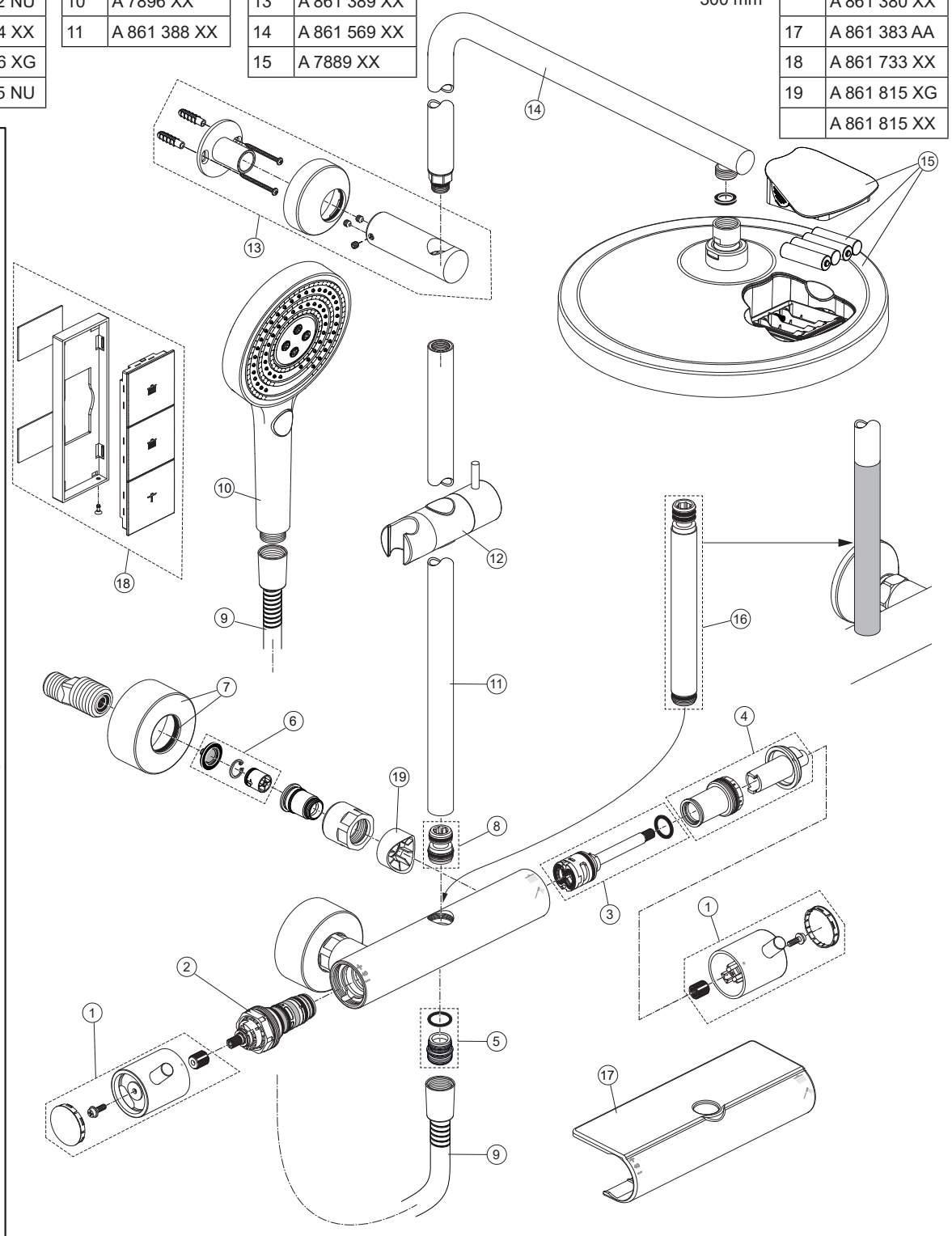

Ideal Standard

# CERATHERM T125

**A 7689 ..**

0824 / A 869 067

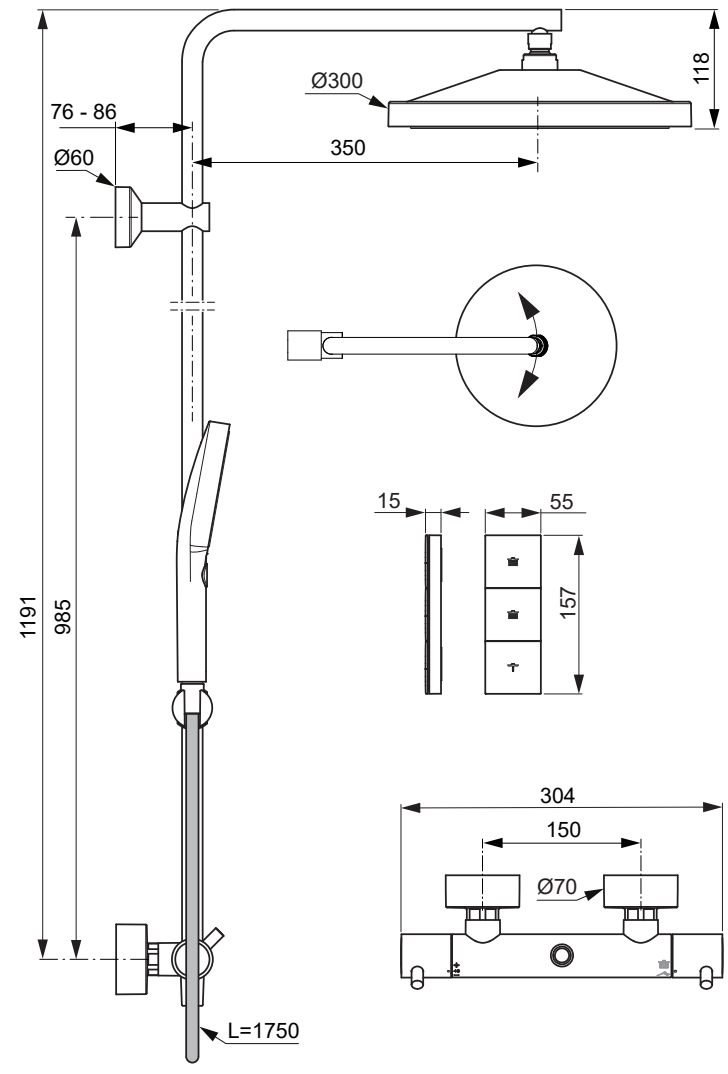


FSC MIX Paper FSC® C149187

22 PAP


Ideal Standard International NV
Corporate Village – Gent Building
Da Vincilaan 2
1935 Zaventem
Belgium

https://www.idealstandard.com

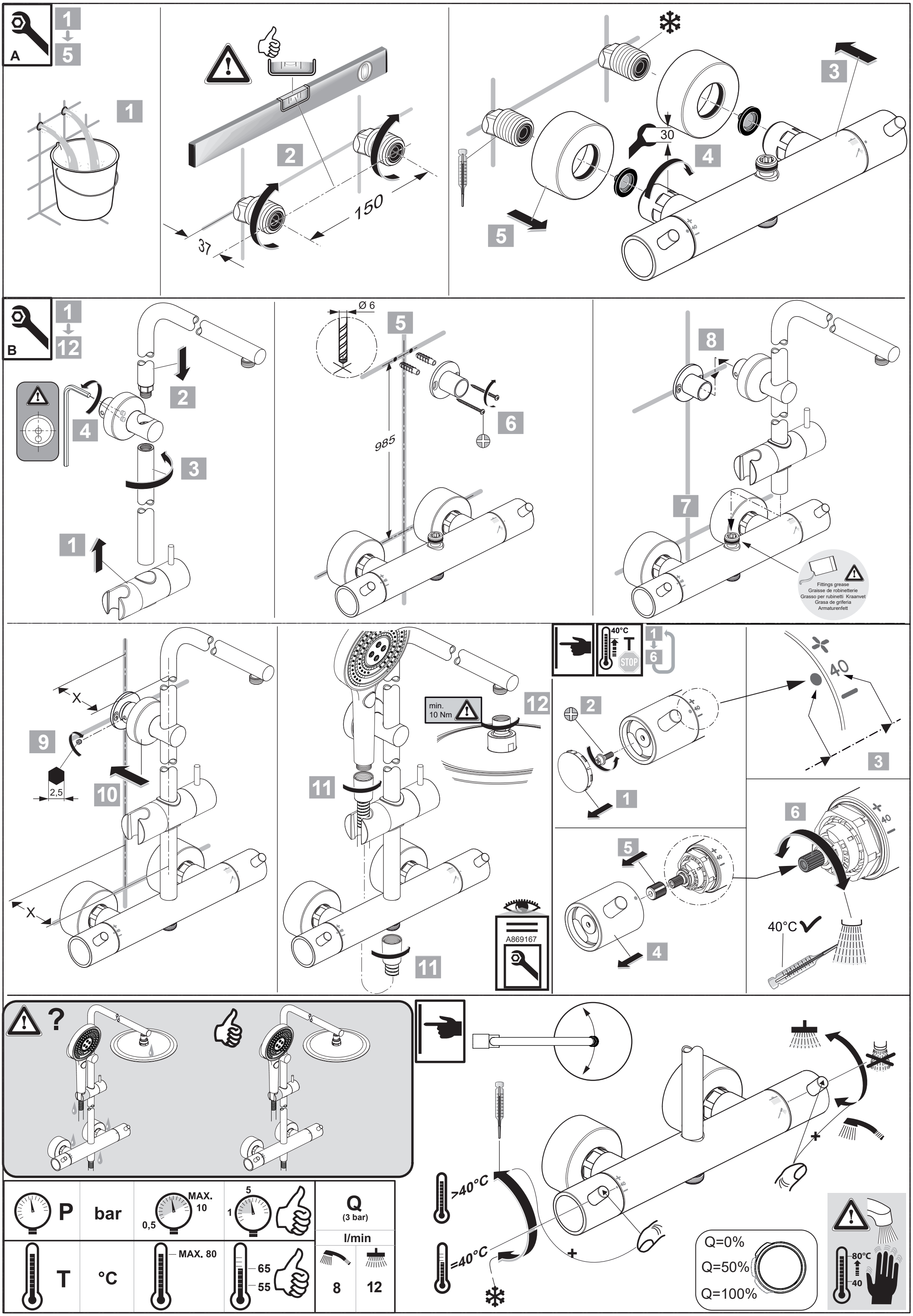
A
1
5
1
2
150
37
3
30
4
5
B
1
12
2
4
3
1
Ø 6
5
6
985
8
7
Fittings grease
Graisse de robinetterie
Grasso per rubinetti Kraanvet
Grasa de griferia
Armaturenfett
X
9
2,5
10
X
min.
10 Nm
12
11
11
A869167
40°C
T
STOP
1
6
2
1
40
3
5
4
6
40
40°C
?
P
bar
0,5
MAX.
10
1
5
Q
(3 bar)
l/min
T
°C
MAX. 80
65
55
8
12
>40°C
=40°C
Q=0%
Q=50%
Q=100%
80°C
40