Technische Daten/ Technical Data

KLUDI MEDI CARE
basin mixer
DN 15

Ref.: 341120524

Finishes:
05 chrome

Product description
Manufacturer KLUDI GmbH & Co. KG
Typ: KLUDI MEDI CARE
basin mixer
Ref.: 341120524

basin mixer
single lever mixer
1-hole mounted
solid clinic lever, metal
adjustable hot water limitation
aerator M24 PCA laminar
ceramic cartridge
flow rate at 3 bar 7,6 l/min.
fixed spout
copper pipes Ø 10mm
rapid installation set

Produktabbildung/ Product picture



Maßzeichnung/ Dimensional drawing

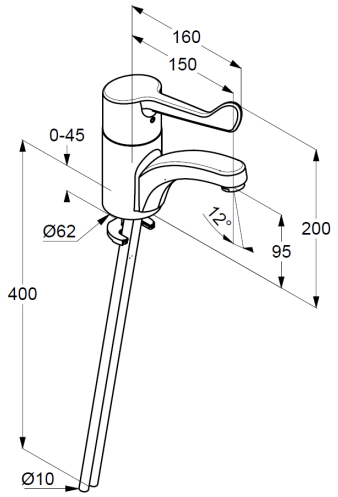

Durchfluss/ Flow rate

