Technische Daten/ Technical Data

KLUDI L-INE XS
kitchen faucet
DN 15

Ref.:
408030578

Finishes:
05 chrome

Product description
Manufacturer KLUDI GmbH & Co. KG
Typ: KLUDI L-INE XS
kitchen faucet
Ref.: 408030578

kitchen faucet
single lever mixer
1-hole mounted
solid lever, metal
lateral actuation
aerator M18 PCA laminar
ceramic cartridge
flow rate at 3 bar 7,6 l/min.
swivel spout (360°)
flexible hoses G⅜ DVGW approved
shank-fixing

Produktabbildung/ Product picture

Maßzeichnung/ Dimensional drawing

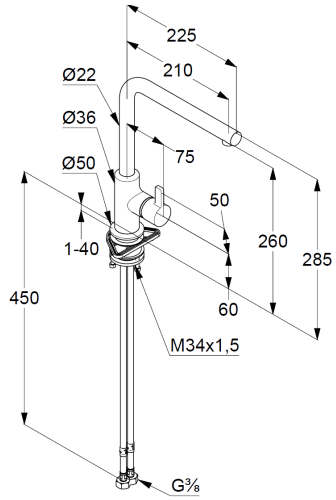

Durchfluss/ Flow rate

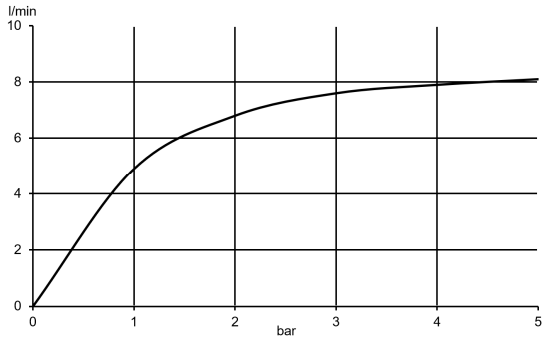

KLUDI
WATER IN PERFECTION