Product: KLUDI MX multi single lever sink mixer DN 15

Ref.: 39906..62

Product description

multi single lever sink mixer DN 15
single hole mounted
open ring lever
ceramic cartridge with hot water safety device
cascade aerator M 24 x 1
flow class A
swivelling spout (360°)
one connection for washing-machine or dishwasher
flexible high pressure supply tubes 3/8 inch
rapid installation set
noise group I, PA-IX 18645/IA

Finishes:
05 chrome
82 chrome/mocca
92 chrome/white

Product picture

Advertisement

multi single lever sink mixer, manufacturer KLUDI GmbH & Co KG
KLUDI MX item no. 39906..62
type: multi single lever sink mixer DN 15 / PN 10 with swivel spout (360°), made of brass, finishes selectable: 05 = chrome; 82 = chrome/mocca; 92 = chrome/white, open ring lever made out of metal, ceramic cartridge K-41 with hot water safety device, cascade aerator M 24 x 1, flow rate 9,5 l/min at 3 bar, with separate connection for washing machine or dishwasher 3/4 inch, flexible high pressure supply tubes 3/8 inch with DVGW / W270 approval, rapid installation set
noise level DIN EN 4109 group I, report no. PA-IX 18645/IA
dimensions: height: 220 mm, nozzle height: 166 mm, projection: 210 mm, lever projection: 108 mm

Dimensional drawing

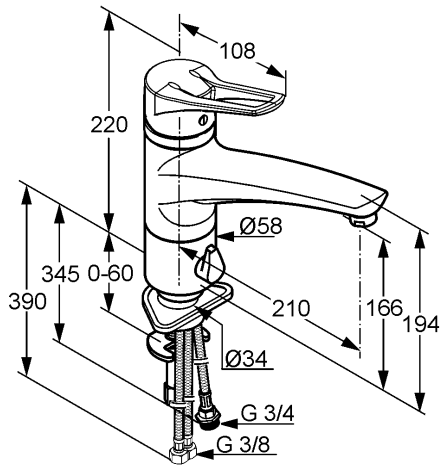

Flow rate diagram

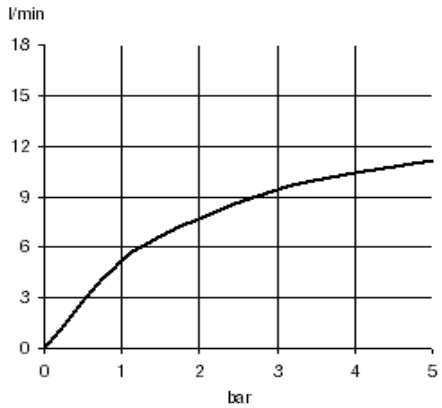

flow class A