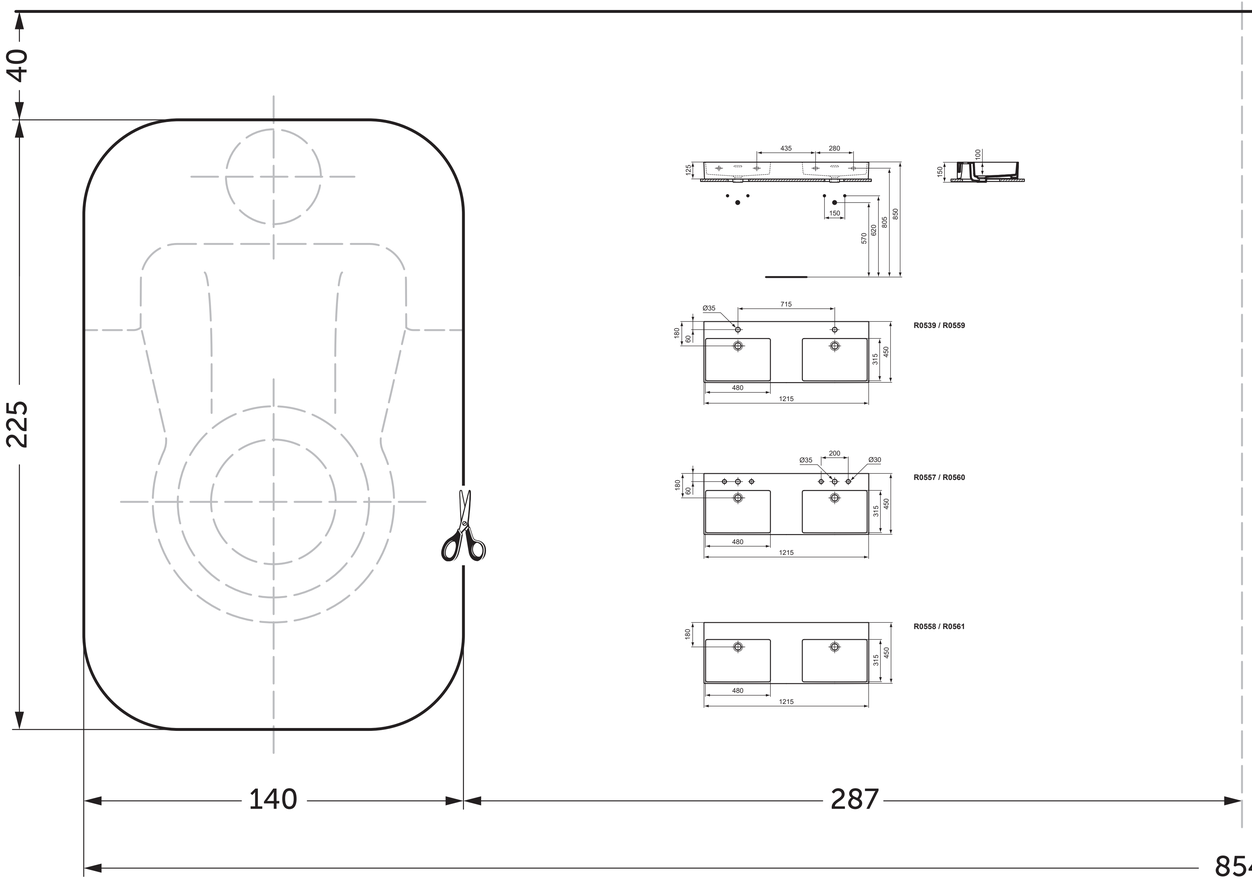

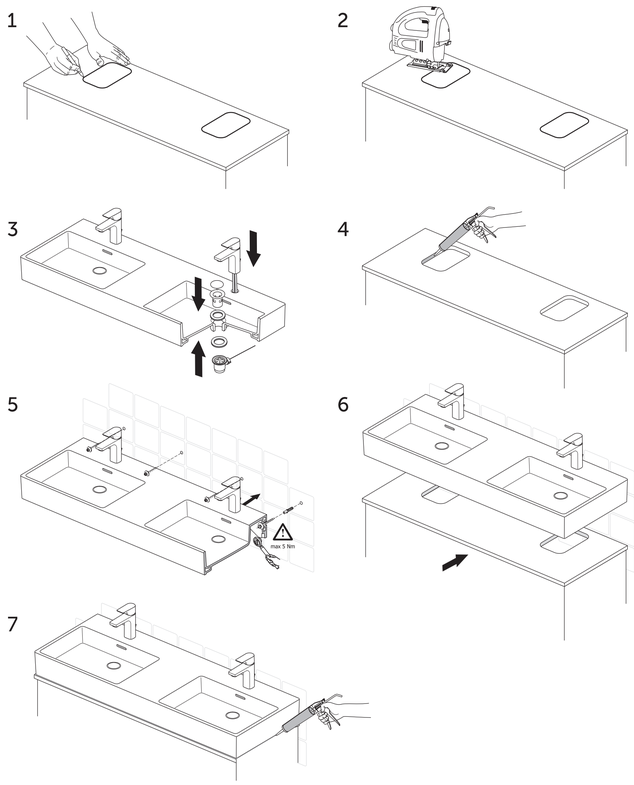

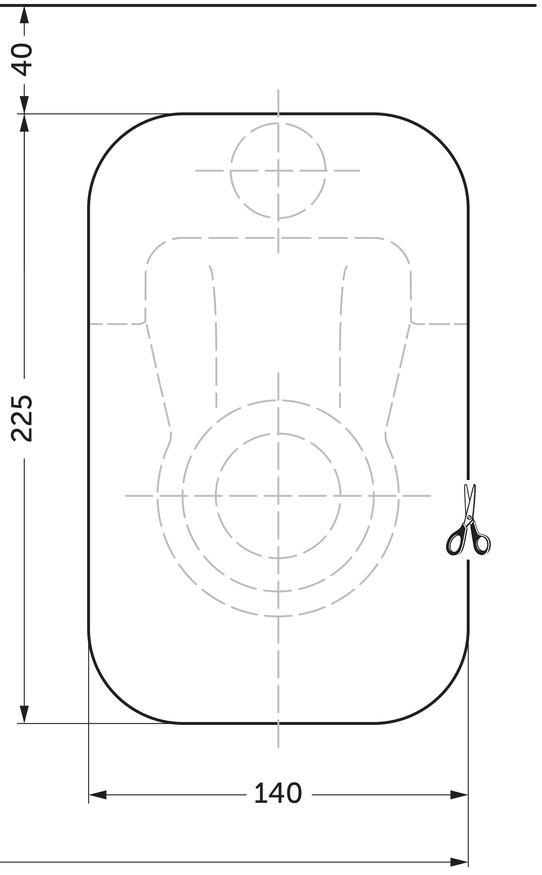

WW19**0025**67

Ideal Standard

Extra
120cm Basin
07/25