Technische Daten/ Technical Data

KLUDI 1926
angle valve
DN 15

Ref.: 518434520

Finishes:
45 gold plated 23 carat

Product description
Manufacturer KLUDI GmbH & Co. KG
Typ: KLUDI 1926
angle valve
Ref.: 518434520

angle valve
wall mounted
cross handle, metal
ceramic headparts 90°
connection G1/2
with push-on rosette Ø 56mm
marking neutral

Produktabbildung/ Product picture

Maßzeichnung/ Dimensional drawing

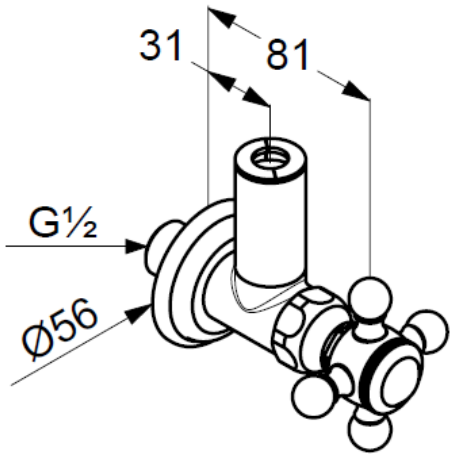

KLUDI