Technische Daten/ Technical Data

KLUDI PURE&SOLID
single lever bidet mixer
DN 15

Ref.: 342160575

Finishes:
05 chrome

Product description
Manufacturer KLUDI GmbH & Co. KG
Typ: KLUDI PURE&SOLID
single lever bidet mixer
Ref.: 342160575

bidet mixer
single lever mixer
1-hole mounted
solid lever, metal
aerator, S-Pointer M24 PCA
ceramic cartridge with hot water safety device
flow rate at 3 bar 6 l/min.
flexible hoses G3/8 DVGW approved
rapid installation set
pop up waste set G1 1/4 metal

Produktabbildung/ Product picture



Maßzeichnung/ Dimensional drawing

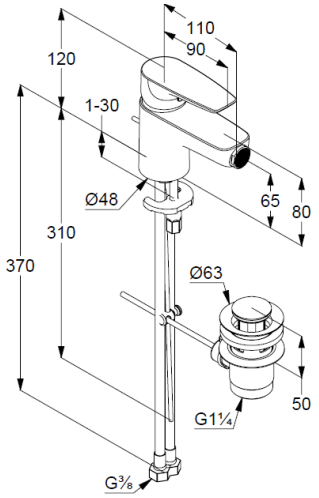

Durchfluss/ Flow rate

