Technische Daten/ Technical Data

KLUDI PURE&EASY, SmartStart
single lever basin mixer 70
DN 15

Ref.: 373880565WR4

Finishes:
05 chrome

Product description
Manufacturer KLUDI GmbH & Co. KG
Typ: KLUDI PURE&EASY, SmartStart
single lever basin mixer 70
Ref.: 373880565WR4

basin mixer
single lever mixer
1-hole mounted
solid handle, metal
aerator M24 PCA
ceramic cartridge with hot water safety device
middle position cold water
flow rate at 3 bar 3,8 l/min.
flexible hoses G3/8 DVGW approved
rapid installation set
pop up waste set G1 1/4 metal
EU taxonomy: max. 6 l/min. -
Substantial Contribution (SC) possible

Produktabbildung/ Product picture



Maßzeichnung/ Dimensional drawing

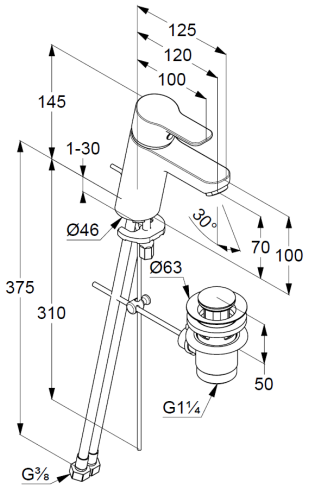

Durchfluss/ Flow rate

