Technische Daten/ Technical Data

KLUDI LOGO
bath shower set 1 S
DN 15

Ref.: 6801005-00

Finishes:
05 chrome

Product description
Manufacturer KLUDI GmbH & Co. KG
Typ: KLUDI LOGO
bath shower set 1 S
Ref.: 6801005-00

hand shower 1 S
1 spray pattern
with cleaning system

connection G1/2
sieve seal
flow rate at 3 bar 22 l/min.
shower hose
plastic coated
with metal-effect
with conical nuts
G1/2 x G1/2 x 1250mm

shower hook
for shower hoses with conical nuts
with fixing material
for rigid wall mounted

Produktabbildung/ Product picture



Maßzeichnung/ Dimensional drawing

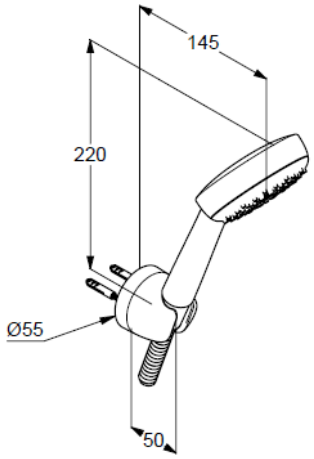

Durchfluss/ Flow rate

