Technische Daten/ Technical Data

KLUDI NOVA FONTE
single lever basin mixer 100
DN 15
Style: PURA

Ref.: 20288O215

Finishes:
O2 Matt Light Dove

Product description
Manufacturer KLUDI GmbH & Co. KG
Typ: KLUDI NOVA FONTE
single lever basin mixer 100
Ref.: 20288O215

basin mixer
single lever mixer
1-hole mounted
solid lever, metal
aerator, S-Pointer M18,5 PCA
ceramic cartridge
flow rate at 3 bar 4,5 l/min.
fixed spout
flexible hoses G3/8 DVGW approved
shank-fixing
push open waste G1 1/4

Produktabbildung/ Product picture

Maßzeichnung/ Dimensional drawing

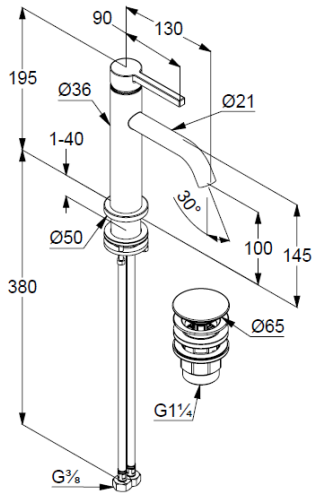
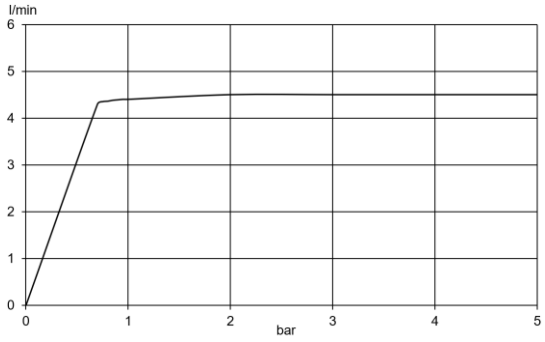
Durchfluss/ Flow rate