Technische Daten/ Technical Data

KLUDI-Medicare
thermostatic clinic mixer
DN 15

Ref.: 350850564

Finishes:
05 chrome

Product description
Manufacturer KLUDI GmbH & Co. KG
Typ: KLUDI-Medicare
thermostatic clinic mixer
Ref.: 350850564

wall mounted clinic mixer
single lever mixer
solid clinic lever, metal
wall mounted
temperature handle with hot water safety at 40°C
ceramic headparts 90°
flow rate at 3 bar 8 l/min.
aerator M24 PCA laminar
S-unions G1/2 x G3/4 lockable
with dirt-catcher sieve

Produktabbildung/ Product picture



Maßzeichnung/ Dimensional drawing

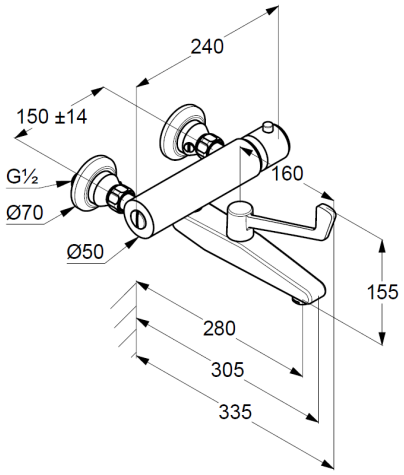

Durchfluss/ Flow rate

